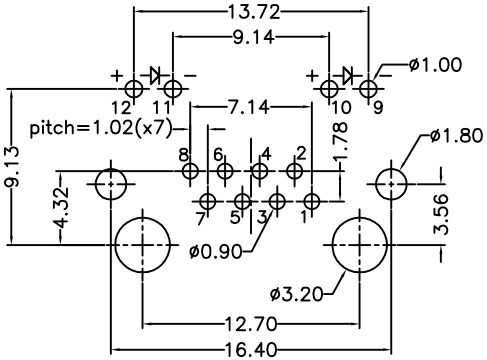

PC Board Layout T=1.6mm
Component Side Shown Tolerance±0.05mm

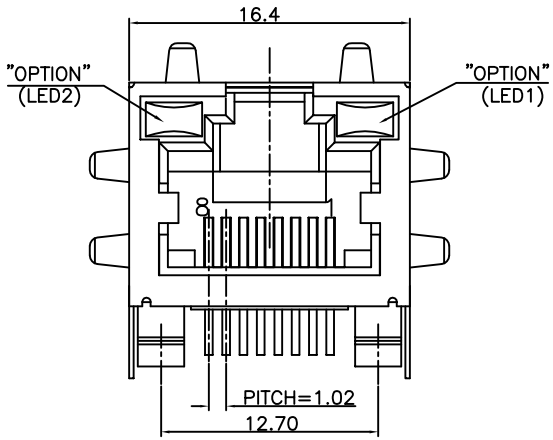

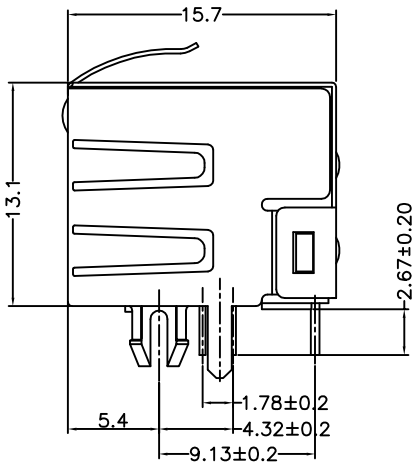

NOTES:

ELECTRICAL:

1. VOLTAGE RATING : 1.5 AMP.
2. CURRENT RATING : 125 VAC RMS.
3. CONTACT RESISTANCE : 30 MILLIOHMS MAX.
4. INSULATION RESISTANCE : 1000 MEGOHMS MIN @ 500 VDC.
5. DIELECTRIC STRENGTH : 1000 VAC RMS 60Hz, 1MIN.
6. LED RATINGS : FORWARD VOLTAGE: 2.2 VOLTS TYPICAL.
   REVERSE VOLTAGE: 5 VOLTS MAXIMUM.
7. OPERATING : 750 CYCLES MIN.

MECHANICAL:

1. HOUSING MATERIAL : GLASS FILLED NYLON UL94V-0. COLOR-BLACK.
2. INSERT MATERIAL : GLASS FILLED NYLON UL94V-0. COLOR-BLACK.
3. BACK PLATE MATERIAL : GLASS FILLED PBT. COLOR-BLACK.
4. LED SIZE : 3.2*2.0*4.0*P=2.29mm.
5. SHIELD MATERIAL : COPPER ALLOY 0.25mm THICKNESS PLATING NI.
6. CONTACT MATERIAL : PHOSPHOR BRONZE t=0.35mm.
7. PLATING : CONTACE AREA-SELECTIIVE GOLD PLATING.
   : TAILS-TIN 150u" MIN OVER NICKEL.
8. PCB RETENTION PRE-SOLDER : 1 LB MIN.
9. PCB RETENTION POST-SOLDER: 10 LBS MIN.

ENVIRONMENTAL:

1. STORAGE TEMPERATURE : -40°C TO +85°C.
2. OPERATION TEMPERATURE : -40°C TO +85°C.
3. WAVE SOLDERING TEMPERATURE : 255°C~265°C (5~10SECONDS).
4. RoHS COMPLIANT.

MATES WITH MODULAR PLUG CONFORMING TO
FCC PART 68, SUBPART F.
CUL FILE NO. E163191

PART NUMBER	LED COLOR		CONTACT	GOLD PLATING
	LED 1	LED 2		
E5J88-11LJD2-L	GREEN	YELLOW	NO TAB	6u"
E5J88-12LJD2-L	GREEN	YELLOW	TOP TABS	6u"
E5J88-14LJD2-L	GREEN	YELLOW	TOP TABS & SIDE TABS	6u"
E5J88-21LJD2-L	GREEN	GREEN	NO TAB	6u"
E5J88-24LJD2-L	GREEN	GREEN	TOP TABS & SIDE TABS	6u"
E5J88-31LJD2-L	YELLOW	GREEN	NO TAB	6u"
E5J88-32LJD2-L	YELLOW	GREEN	TOP TABS	6u"
E5J88-34LJD2-L	YELLOW	GREEN	TOP TABS & SIDE TABS	6u"

DETACHED LISTS

MM (INCH)

TOLERANCES EXCEPT AS NOTED

MM	
.0 ± 0.2	±
.00 ± 0.15	±
.000 ± 0.075	±

ANGLES ± 0.5

THIRD ANGLE PROJECTION

RoHS Compliant

Pulse A TECHNITROL COMPANY

TITLE RJ45 SIDE ENTRY LED JACK

DFTO Cathy	DRAWING NO. CE5J3A03-LA	SIZE A3	REV 0
DATE 2006/09/22	/PART NO. SEE TABLE		
SCALE :	DO NOT SCALE DRAWING	SHEET 1 OF 1	