THIS DRAWING IS UNPUBLISHED
VERTRAULICHE UNVEROEFFENTLICHE ZEICHNUNG
RELEASE FOR PUBLIKATION ,2000
FREI FUER VEROEFFENTLICHUNG
© COPYRIGHT 2000 BY AMP INCORPORATED ALL RIGHTS RESERVED
ALLE RECHTE VORBEHALTEN

MATED WITH:
PASSEND ZU:
HB 10

LOC	DIST
AI	-

PROJEKT NR. EGGMA05416

REVISIONS
ABENDERUNGEN

P	LTR	DESCRIPTION BESCHREIBUNG	DATE	DWN	APVD
	B1	RELEASED AS PER ECR-06-006493	3/16/2006	RS	ST
	B2	REVISED PER ECO-09-026495	28NOV09	KK	AEG

5

PN: 0-3, ~~0-6~~ & 0-9 as shown

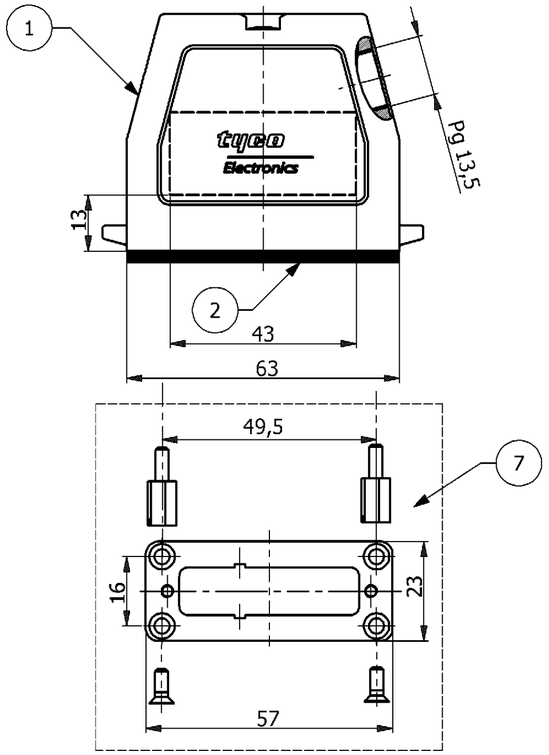

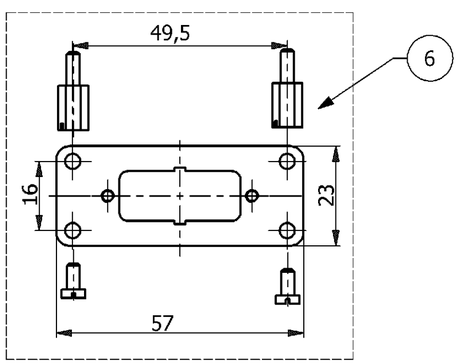

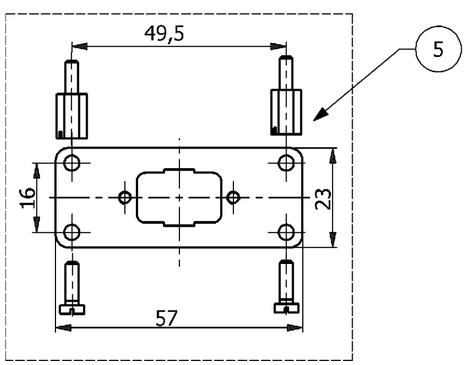

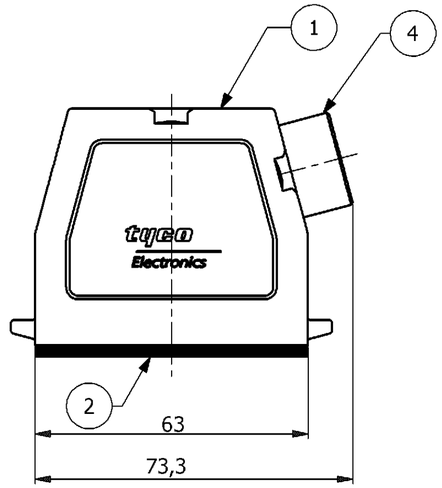

PN: 0-1, 0-4 & 0-7 as shown

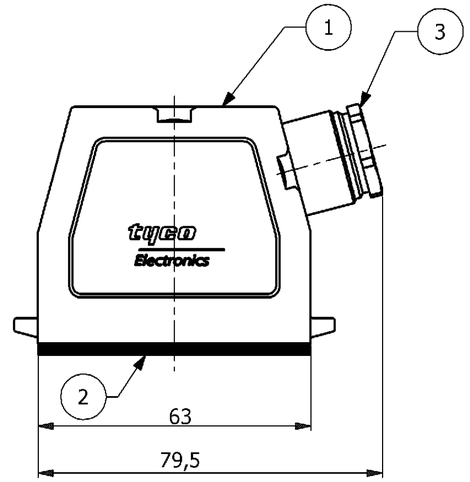

PN: ~~0-2, 0-5 & 0-8~~ as shown 5

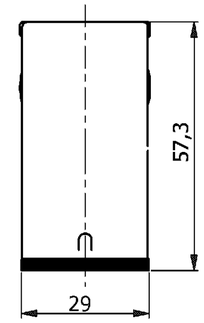

NOTES,

1 PACKAGING QUANTITY: 5 PIECES PER BOX

2 MATERIAL: HOUSING: ALUMINIUM DIECASTING ALLOY
SEALS : NEOPRENE

3 SURFACE:POWDER VARNISH GREY
ALUMINIUM OXIDE + VARNISH BLACK

4 VARNISH ON THE INSIDE NOT NECESSARY

5 **OBSOLETE PARTS: OBSOLETE CIS STREAMLINING PER D.RENAUD/D.SINISI**

(1 : 2)

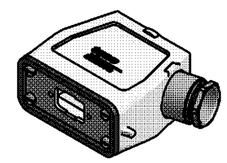

PN: ~~0-2, 0-5 & 0-8~~ 5

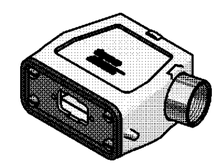

PN: 0-1, 0-4 & 0-7

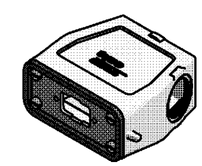

PN: 0-3, ~~0-6~~ & 0-9
5

0-9	~~0-8~~	0-7	~~0-6~~	~~0-5~~	0-4	0-3	~~0-2~~	0-1	DESCRIPTION	MATERIAL	SURFACE	COLOR	ITEM	REMARKS
										2	3	3		
1	1	1	-	-	-	-	-	-	Mounting Plate, 1x25	St2K40GBK	Zinc Plated	Blue	7	Packed Separately in PE bag
-	-	-	1	1	1	-	-	-	Mounting Plate, 1x15	St2K40GBK	Zinc Plated	Blue	6	Packed Separately in PE bag
-	-	-	-	-	-	1	1	1	Mounting Plate, 1x9	St2K40GBK	Zinc Plated	Blue	5	Packed Separately in PE bag
-	-	1	-	-	1	-	-	1	Cable Gland Pg13,5	Brass	Nickel Plated	-	4	-
-	1	-	-	1	-	-	1	-	Adaptor Round Pg13,5	Brass	Nickel Plated	-	3	-
1	1	1	1	1	1	1	1	1	Profile Seal	Neoprene	-	Black	2	-
1	1	1	1	1	1	1	1	1	Hood, HA.10,Pg13,5	Aluminium	-	Grey	1	-
									ORDERING TEXT					
									HA.10.SM-STS.1.13,5 AM 1x9					
									HA.10.SM-STS.1.13,5.Z/AM 1x9					
									HA.10.SM-STS.1.13,5.G/AM 1x9					
									HA.10.SM-STS.1.13,5 AM 1x15					
									HA.10.SM-STS.1.13,5.Z/AM 1x15					
									HA.10.SM-STS.1.13,5.G/AM 1x15					
									HA.10.SM-STS.1.13,5 AM 1x25					
									HA.10.SM-STS.1.13,5.Z/AM 1x25					
									HA.10.SM-STS.1.13,5.G/AM 1x25					

OBSOLETE 5 | OBSOLETE 5 | OBSOLETE 5

THIS DRAWING IS A CONTROLLED DOCUMENT FOR AMP INCORPORATED. IT IS SUBJECT TO CHANGE AND THE CONTROLLING ENGINEERING ORGANIZATION SHOULD BE CONTACTED FOR THE LATEST REVISION. DIESES TECHNISCHE DOKUMENT WIRD DURCH AMP INCORPORATED KONTROLLIERT. ÄNDERUNGEN VORBEHALTEN. WENDEN SIE SICH BITTE AN DIESEN ENGINEERING PARTNER, UM DEN JEWEILS LETZTGÜLTIGEN ÄNDERUNGSSTAND ERFAHREN SIE AUF ANFRAGE.

DIMENSIONS:
DIMENSIONEN:
mm

TOLERANCES UNLESS OTHERWISE SPECIFIED:
ALLGEMEINTOLERANZEN
n. ISO 8015 -
n. ISO 2768 - mH-E
n. DIN 16901- 140
0 PLC #
1 PLC #
2 PLC #
3 PLC #
ANGLES / WINKEL #

MATERIAL 2

FINISH / OBERFLÄCHE / FARBE 3

DWN	R.SRINIVAS	3/3/2006
CHK	R.SRINIVAS	3/3/2006
APVD	T.SCHNURPFEIL	3/3/2006
PRODUCT SPEC. PRODUKTSPEZ.	-	
APPLICATION SPEC. VERARBEITUNGSSPEZ.	-	
WEIGHT GEWICHT	---	

Tyco / Electronics AMP GmbH
D - 53819
Neunkirchen,Germany

NAME
HOOD
HA.10.STS.1.13,5/AM1X9/1X15/1X25

SIZE	CAGE CODE	DRAWING NO ZEICHNUNGS-NR.	RESTRICTED TO NUR FUER
A2	00779	1107100	

CUSTOMER DRAWING / KUNDENZEICHNUNG

SCALE MASSSTAB 1:1 | SHEET BLATT 1 OF VON 1 | REV. B2

AMP 1471-9 REV 27JUN96

This is a TRANSLATED file from Computervision, Inc,, Medusa Revision 12.2.5T