REV.	DATE	DESCRIPTION
A	06/03/03	ADD MOUNTING HOLES / UPDATE DRAWING FORMAT
B	06/25/04	MODIFY PLATING SPEC.

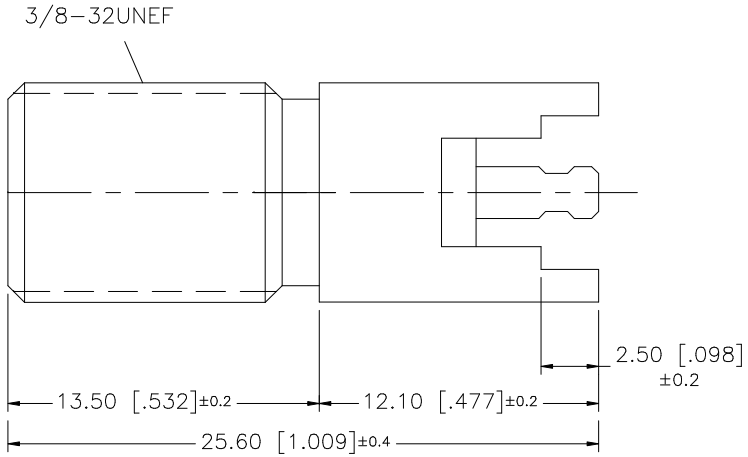

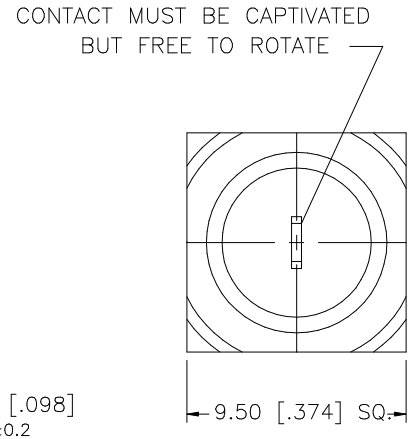

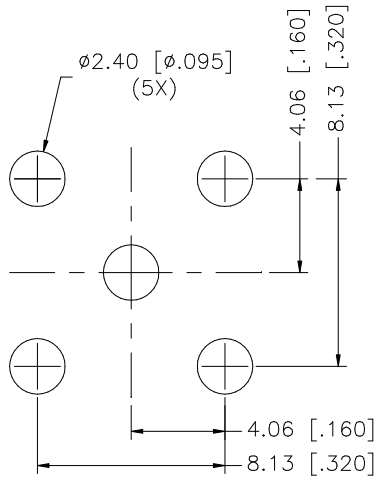

P.C.B. MOUNTING HOLES

	DESCRIPTION	MATERIAL	FINISH	QTY
8				
7				
6				
5				
4	INSULATOR	P.P.	NATURAL	1
3	CONTACT PIN	BRASS	TIN	1
2	INSULATOR	P.P.	NATURAL	1
1	BODY	BRASS	TIN	1

UNLESS OTHERWISE SPECIFIED DIMENSIONS ARE IN MILLIMETERS. DIMENSIONS IN [ ] ARE IN INCHES AND FOR CUSTOMER REFERANCE ONLY.

UNLESS OTHERWISE SPECIFIED TOLERANCES FOR MILLIMETERS ARE:
0.5 – 8mm ± 0.20mm
8 – 30mm ± 0.40mm
30 – 120mm ± 0.50mm

UNLESS OTHERWISE SPECIFIED TOLERANCES FOR INCHES ARE:
.020 – .315 = ± 0.007"
.315 – 1.180 = ± 0.015"
1.180 – 4.724 = ± 0.020"

DO NOT SCALE DRAWING

APPROVALS		DATE
DRAWN	G.R.S.	06/25/04
CHECKED		
ISSUED		
SHEET	1 OF 1	

CAD FILE C:/222/222141.DWG

Amphenol Connex

PART DESCRIPTION: F P.C. MOUNT CONNECTOR

PART NO. 222141

DWG. NO. 222141.DWG | REV. B | SIZE A | SCALE NA