DRAWING MADE IN THIRD ANGLE PROJECTION

PART NUMBER	REV	FIRST USED
1385402 – 1	C	122500–1
1385402 – 2	C	565435–5
1385402 – 3	C	354500–1
1385402 – 6	C	122500–1

1385402 ⇨ 1385402

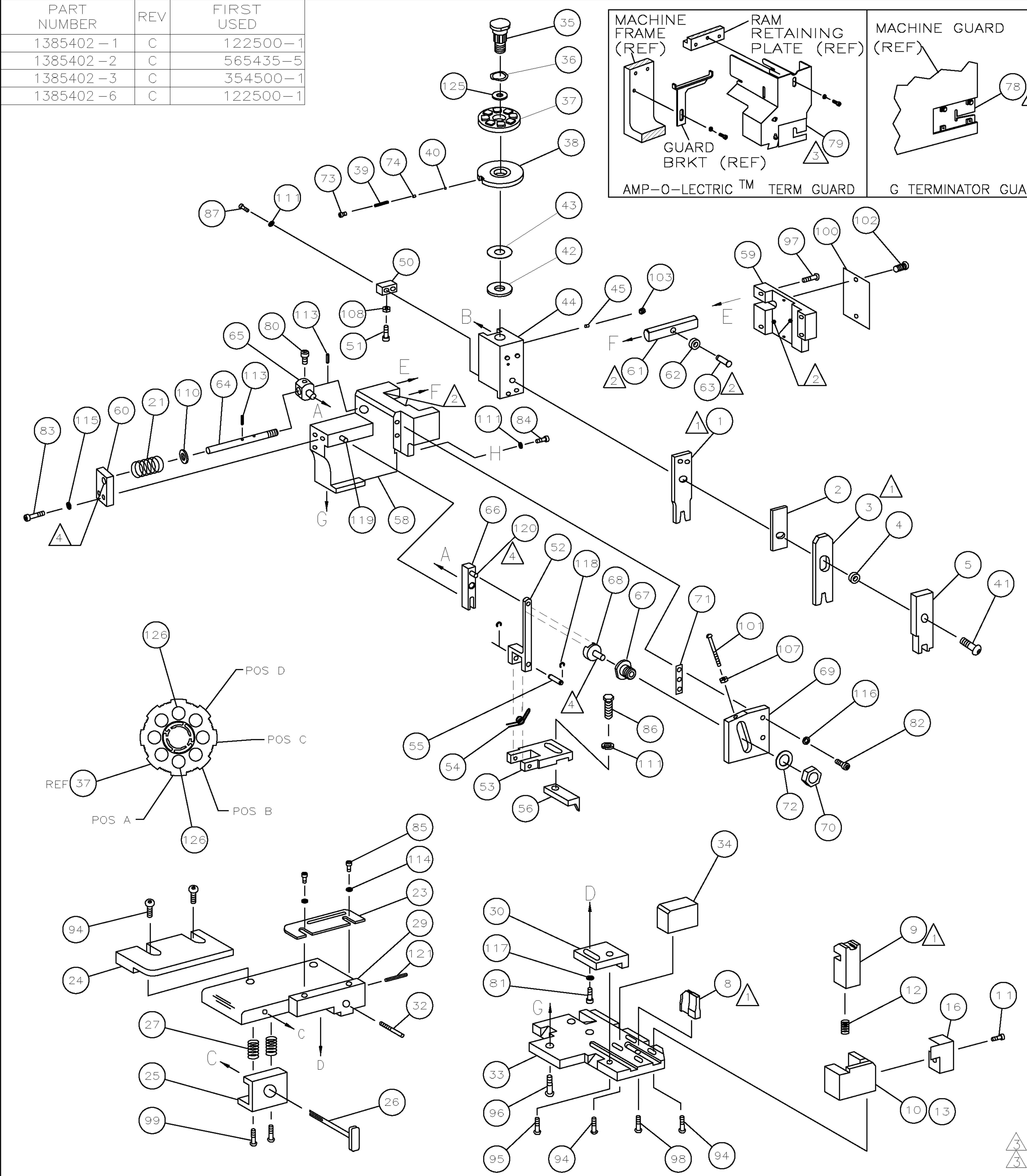

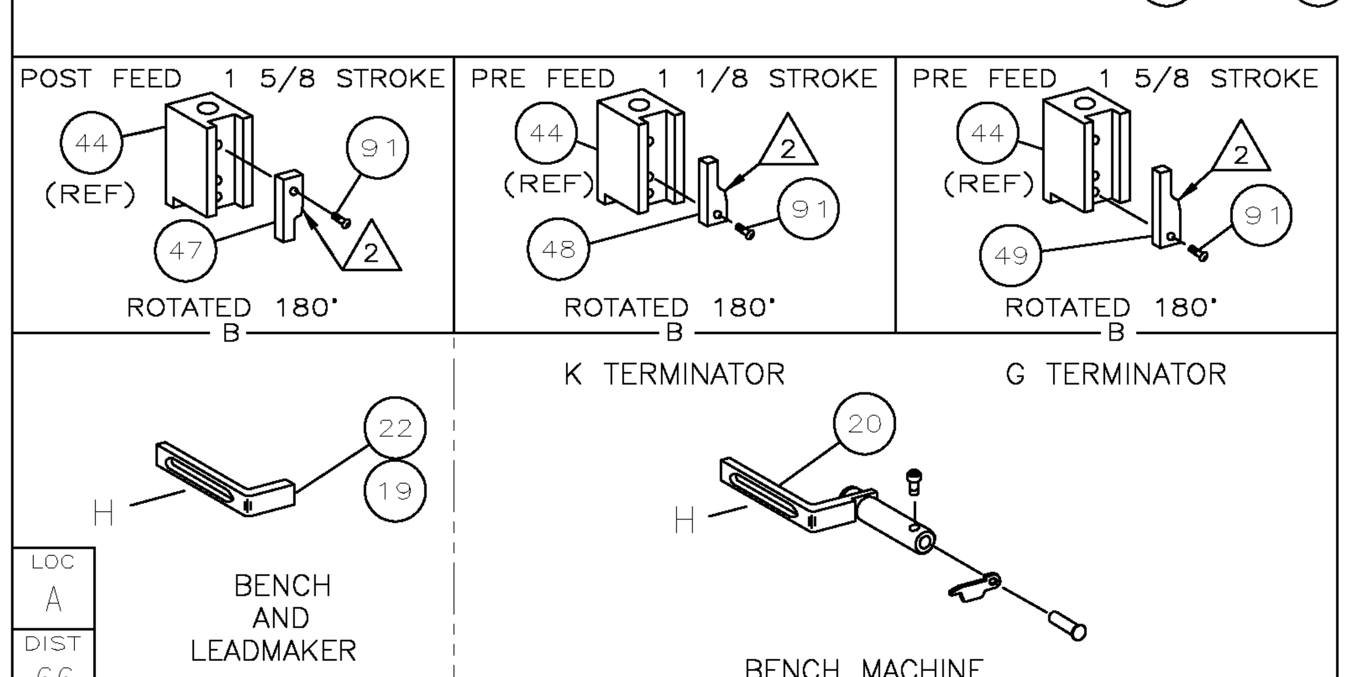

1. △1 RECOMMENDED SPARE PARTS.
2. △2 GREASE LIGHTLY.
3. △3 GUARD MUST BE IN PLACE WHEN OPERATING APPLICATOR IN A BENCH MACHINE.
4. △4 LUBRICATE DAILY USING NO. 20 MACHINE OIL.
5. ITEMS WITH QTY OF REF SPECIFIED (EXCEPT ITEMS 78 AND 79) ARE USED ON ITEM 46.
6. △6 TO BE DETERMINED AT ASS'Y.

TERMINAL NAME: TERMINAL

AMP TERM PN	MFR TERM PN
1572074	12052224

PACKARD TERMINAL AMP CRIMP SPECS

PAD LTR	CRIMP HEIGHT	WIRE SIZE
A	.085 ±.002 [2.16 ±0.05mm]	12
B	NOT	USED
C	NOT	USED
D	NOT	USED

CRIMP	SIZE	TYPE	RANGE
WIRE	.140 [3.55mm]	F	12
INSUL	.180 [4.57mm]	F	△6

WIRE STRIP LENGTH	TERM APPL SPEC	FEED	APPL INSTRUCTION	SET UP GAGE	LAYOUT
.211–.228	NONE	.680	408–8040	458637–1	L2649

–1	LEADMAKER	MECH POST FEED	–6	LEADMAKER	MECH POST FEED
–2	BENCH MODEL K	MECH PRE FEED			
–3	BENCH MODEL G	MECH PRE FEED			

–6	–3	–2	–1	U/M	DWG SIZE	PART NO	DESCRIPTION	ITEM NO	NOTE
								129	
								128	
								127	
2	2	2	2	–	C	6–354778–1	PIN, WIRE DISC (.2800)A	126	
1	1	1	1	–	A	986950–1	WASHER, FLAT PRECISION	125	
1	1	1	1	–	A	217238–1	GENERAL INSTRUCTION PACKAGE	124	
1	1	1	1	–	–	4088040	SF APPL INST 408–8040	123	
								122	
1	1	1	1	–	A	4–21028–0	PIN,SLT SPR(Ø.093x.75)ST GDE PL	121	
REF	REF	REF	REF	–	A	1–21030–1	PIN,DOWEL(Ø.187x.50)LEVER	120	
REF	REF	REF	REF	–	A	1–21030–6	PIN,DOWEL(Ø.187x1.25)HOUSING	119	
REF	REF	REF	REF	–	A	21045–3	RING,RET "C"(Ø.187)FD FING PIN	118	
1	1	1	1	–	A	21024–5	WASHER, LOCK(#10)ADJ BLOCK	117	
REF	REF	REF	REF	–	A	21024–5	WASHER,LOCK(#10)ADJ PLATE	116	
REF	REF	REF	REF	–	A	21024–5	WASHER,LOCK(#10)FEED GDE ROD	115	
2	2	2	2	–	A	21024–2	WASHER,LOCK(#4)FRONT STP GUIDE	114	
REF	REF	REF	REF	–	A	5–21028–1	PIN,SLT SPR(Ø.125x.50)ADJ ROD	113	
								112	
4	4	4	4	–	A	21024–4	WASHER,LOCK(#8)STRIPPER	111	
REF	REF	REF	REF	–	A	21899–4	WASHER,FLAT(Ø5/16)SCREW ADJ	110	
								109	
1	1	1	1	–	A	21018–5	NUT,HEX(NO.6)HOLDDOWN	108	
REF	REF	REF	REF	–	A	21068–5	NUT,HEX(6–32)FEED ADJ	107	
								106	
								105	
								104	
1	1	1	1	–	A	21009–2	SCR,SKT SET(1/4–20x.25 LW)RAM	103	
2	2	2	2	–	A	21017–2	SCR,DRIVE(#2x.19)ID PLATE	102	
REF	REF	REF	REF	–	A	6–23715–5	SCR,PAN HD(6–32x1.50)FEED ADJ	101	
1	1	1	1	–	B	461264–1	PLATE, IDENTIFICATION	100	
2	2	2	2	–	A	5–21006–6	SCR,SET(10–32x.75)DRAG	99	
1	1	1	1	–	A	22733–8	SCR,BHC(8–32x.38 LW)ANVIL	98	
REF	REF	REF	REF	–	A	2–21002–9	SCR,BHC(10–32x.75)CAP	97	
REF	REF	REF	REF	–	A	2–22733–8	SCR,BHC(1/4–20x.62)HOUSING	96	
REF	REF	REF	REF	–	A	2–21002–7	SCR,BHC(10–32x.50)SG ADJ BLOCK	95	
6	6	6	6	–	A	2–21002–2	SCR,BHC(8–32x.50)TERM H DWN	94	
								93	
								92	
1	1	1	1	–	A	1–21002–7	SCR,BHC(6–32x.38)CAM	91	
								90	
								89	
								88	
2	2	2	2	–	A	9–21000–9	SCR,SHC(8–32x.44)DEP–HOLD	87	
1	1	1	1	–	A	2–22603–0	SCR,HEX HD(8–32x.31)FEED FINGER	86	
2	2	2	2	–	A	1–21000–3	SCR,SHC(4–40x.25)FR ST GUIDE	85	
1	1	1	1	–	A	2–21000–7	SCR,SHC(8–32x.50)STRIPPER	84	
REF	REF	REF	REF	–	A	3–21000–7	SCR,SHC(10–32x.75)FEED ROD GD	83	
REF	REF	REF	REF	–	A	3–21000–6	SCR,SHC(10–32x.62)FD ADJ BLK	82	
1	1	1	1	–	A	3–21000–4	SCR,SHC(10–32x.38)SG ADJ BL	81	
REF	REF	REF	REF	–	A	3–21000–4	SCR,SHC(10–32x.38)PIVOT BLK	80	
–	–	REF	–	–	B	455749–1	GUARD, WINDOW	79	△3 △1
REF	REF	–	–	–	B	679532–1	INSERT, GUARD	78	△3 △1
								77	
								76	
								75	
1	1	1	1	–	A	690603–1	SPRING, ASSIST	74	
1	1	1	1	–	A	23030–1	SCR,SHC(6–32x.25 SL)INS DISC	73	△1
REF	REF	REF	REF	–	A	458109–1	WASHER, SPECIAL	72	
REF	REF	REF	REF	–	A	690517–1	SPACER	71	△1

QTY REQD PER ASSY — PARTS LIST

–6	–3	–2	–1	U/M	DWG SIZE	PART NO	DESCRIPTION	ITEM NO
REF	REF	REF	REF	–	B	22594–8	NUT,HEX(1/2–20)	70
REF	REF	REF	REF	–	B	240628–1	PLATE, ADJUSTMENT	69
REF	REF	REF	REF	–	B	240626–1	SHAFT, PIVOT	68
REF	REF	REF	REF	–	B	240633–1	BUSHING	67
REF	REF	REF	REF	–	A	455680–1	LEVER, INTERMEDIATE	66
REF	REF	REF	REF	–	B	240629–1	BLOCK, PIVOT	65
REF	REF	REF	REF	–	A	240632–2	SCREW, ADJ FEED ROD	64
REF	REF	REF	REF	–	B	240659–3	PIN, CAM ROLLER	63
REF	REF	REF	REF	–	B	240658–1	ROLLER, CAM	62
REF	REF	REF	REF	–	B	454398–2	ROD, FEED	61
REF	REF	REF	REF	–	A	454178–1	GUIDE, FEED ROD	60
REF	REF	REF	REF	–	C	454220–1	CAP, RAM	59
REF	REF	REF	REF	–	D	454485–1	HOUSING	58
								57
1	1	1	1	–	B	458537–2	PAWL, FEED	56
REF	REF	REF	REF	–	B	240624–1	PIN, FEED FINGER	55
REF	REF	REF	REF	–	B	691499–1	SPRING, FEED FINGER	54
REF	REF	REF	REF	–	B	690541–1	HOLDER, FEED FINGER	53
REF	REF	REF	REF	–	A	455679–2	LEVER, TERMINAL FEED ARM	52
1	1	1	1	–	A	811242–2	BUMPER, HOLDDOWN	51
1	1	1	1	–	A	690753–1	SPACER, TONKER	50
–	1	–	–	–	B	690602–6	CAM, PRE–FEED 1 5/8 ST	49
–	–	1	–	–	B	690602–5	CAM, PRE–FEED 1 1/8 ST	48
1	–	–	1	–	B	690501–4	CAM, POST–FEED 1 5/8 ST	47
1	1	1	1	–	B	459456–2	APPLICATOR, BASIC (SUBASSY)	46
1	1	1	1	–	A	690191–1	PLUG, NYLON	45
1	1	1	1	–	C	455673–1	RAM	44
1	1	1	1	–	A	690125–1	WASHER, LAMINATED	43
1	1	1	1	–	A	690124–1	WASHER, RAM	42
1	1	1	1	–	A	7–21002–9	BOLT, CRIMPER(5/16x1.00)	41
1	1	1	1	–	A	23241–6	BALL, STEEL	40
1	1	1	1	–	A	690170–1	SPRING, COMPRESSION	39
1	1	1	1	–	C	690142–4	DISC, INSULATION	38
1	1	1	1	–	D	354777–1	WIRE DISC, PLASTIC	37
1	1	1	1	–	A	22480–5	WASHER, SPRING	36
1	1	1	1	–	B	690212–1	POST, RAM	35
1	1	1	1	–	B	690786–1	SUPPORT, TERMINAL	34
REF	REF	REF	REF	–	D	455675–1	PLATE, BASE	33
1	1	1	1	–	A	690432–3	SCREW, ADJUSTMENT	32
								31
REF	REF	REF	REF	–	B	455689–1	BLOCK, STRIP GUIDE ADJ	30
1	1	1	1	–	C	455671–1	PLATE, STRIP GUIDE	29
								28
2	2	2	2	–	A	1–22284–0	SPRING, DRAG	27
1	1	1	1	–	B	690546–1	LEVER, DRAG RELEASE	26
1	1	1	1	–	B	240792–1	DRAG, TERMINAL	25
1	1	1	1	–	D	8–690504–8	GUIDE, STRIP (REAR)	24
1	1	1	1	–	A	690438–1	GUIDE, STRIP (FRONT)	23
1	–	–	1	–	B	690472–2	STRIPPER	22
REF	REF	REF	REF	–	A	4–22284–9	SPRING, FEED RETURN	21
								20
–	1	1	–	–	B	691353–1	STRIPPER	19
								18
								17
–	1	1	1	–	B	318563–1	GUARD, CHIP, FRONT	16
								15
								14
1	–	–	–	–	B	679625–1	HOLDER, SHEAR (REAR)	13
1	1	1	1	–	A	3–22280–3	SPRING, SHEAR	12
1	1	1	1	–	B	690461–1	STOP, SHEAR	11
–	1	1	1	–	C	690459–1	HOLDER, SHEAR (FRONT)	10
1	1	1	1	–	C	454276–2	SHEAR, FLOAT (FRONT)	9
1	1	1	1	–	C	1–662192–3	ANVIL	8
								7
								6
1	1	1	1	–	C	1–455889–4	DEPRESSOR, SHEAR (FRONT)	5
1	1	1	1	–	B	238011–2	SPACER, BLOCK CRIMPER	4
1	1	1	1	–	C	8–683454–8	CRIMPER, INSULATION	3
1	1	1	1	–	C	1–455888–4	SPACER, CRIMPER	2
1	1	1	1	–	C	2–456411–2	CRIMPER, WIRE	1

← REVISION OF EACH ASSY NO (WHEN BLANK, USE DWG REVISION)

QTY REQD PER ASSY — PARTS LIST

LTR	REVISION RECORD	APP	DATE
C	ECR–11–013508	LZ/SX	29JUN2011
B1	ADDED –6	RS	6–11
B	ECN 0150–0978–02	TE	7–02
A	REVISED	BH	4–02

DIMENSIONS IN INCHES. DO NOT SCALE PRINT.
TOLERANCES UNLESS OTHERWISE SPECIFIED:
2 PLC DEC ± –
3 PLC DEC ± –
4 PLC DEC ± –
ANGLES ± –
SURF TEXTURE: √
REMOVE BURRS, BREAK SHARP EDGES R.015 MAX

MATL – – | HT TR – – | FIN – –

DR B.HIGMAN 01APR02 | APP T.ELBIN 01APR02
CHK – – | REL – –

TE CONNECTIVITY Harrisburg, PA 17105–3608

NAME: SIDE FEED HDM APPLICATOR — MACHINE REF: MINI APPL
SCALE – | D | DWG NO 1385402 | SHEET 1 OF 1 | REV C

CAGE CODE 00779 — CUSTOMER AND ASSEMBLY DRAWING — RESTRICTED TO –

LOC A — DIST 66

THIS DRAWING IS A CONTROLLED DOCUMENT.
THIS DRAWING IS UNPUBLISHED. © COPYRIGHT 2002 BY AMP INCORPORATED. ALL RIGHTS RESERVED. RELEASED FOR PUBLICATION .2002 .

AMP 1756 REV 3–92 Translated 020406.014450 (YYMMDD.HHMMSS) from Computervision, Inc., Medusa Revision 12.2.5T

8 7 6 5 4 3