Alle Rechte vorbehalten/ *All rights reserved*

REEL LABEL

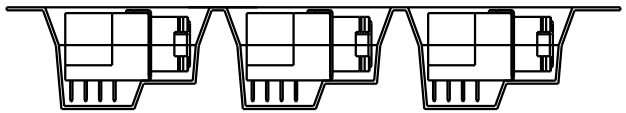

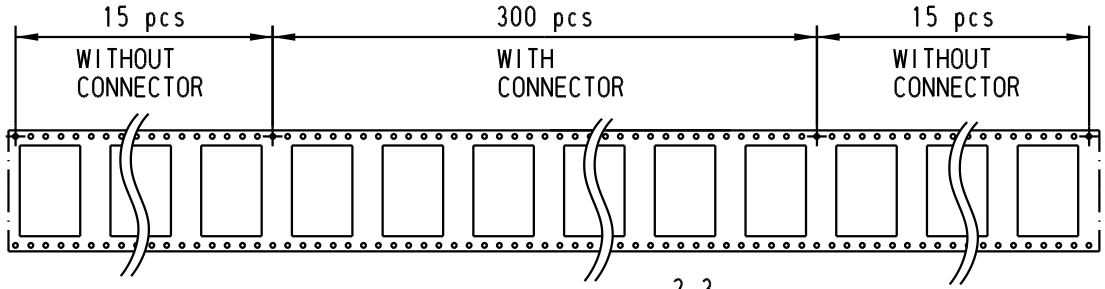

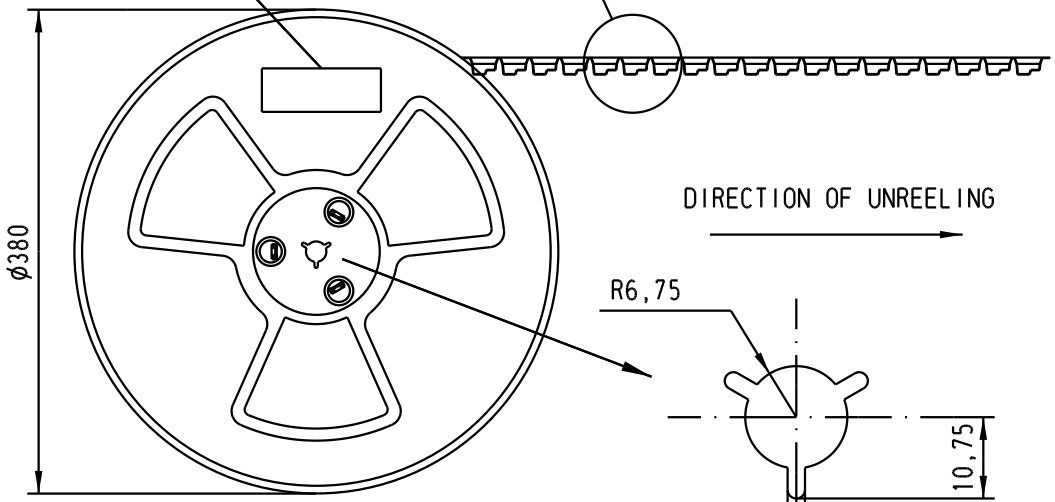

DIRECTION OF UNREELING

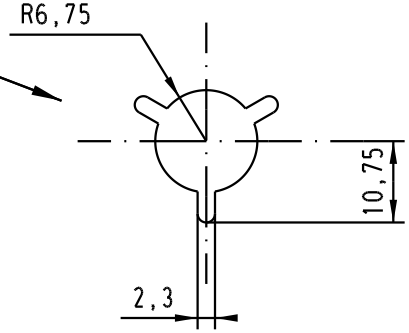

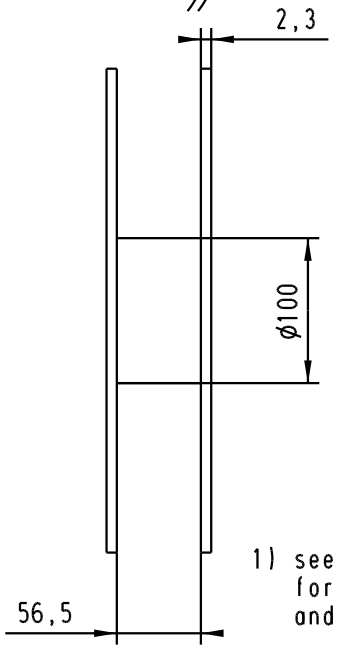

1) see TB 60 11 026 5732 folio 1/2 for connector dimensions and PC-Board layout

Packaging in accordance with EIA 481-2-A

tape & reel packaging for gripping process

60 11 026 5732.710	in reel unit packaging 300 connectors
part number	index designation

33470	03-MAY-06	JB
Mod.	Dat.	Name

	Dat.	Name
Detail.	06-MAY-06	JB
Insp.		
Stand.		

All Dim. in mm
Orig. Size DIN A 4

HARTING EURL
F-95972 Paris

har.mik® I/O bellow
26 poles female SMC
with angled solder pins,
thread hole M2,5, fixed latches
in reel unit packaging

Maßstab/ *Scale*

TB 60 11 026 5732

Sub.

Blatt/ *Page* 2/2