NOTES:
1. MATERIALS AND FINISHES:
   BODY - BRASS, NICKEL PLATING
   CONTACT - PHOSPHOR BRONZE, GOLD PLATING
   RING, HEX NUT - BRASS, NICKEL PLATING
   LOCKWASHER - PHOSPHOR BRONZE, NICKEL PLATING
   PINS (4) - BRASS, GOLD PLATING
   INSULATOR - PTFE
2. ELECTRICAL:
   A. IMPEDANCE: 75 OHM
   B. FREQUENCY RANGE: DC - 3 GHz
   C. DIELECTRIC WITHSTANDING VOLTAGE: 1500 VRMS, MIN.
3. MECHANICAL:
   A. DURABILITY: 500 CYCLES MIN.
   B. TEMPERATURE RANGE: -65° C TO +165° C
4. PACKAGING:
   A. QUANTITY: SINGLE PACK
   B. MARKING: BAG TO BE MARKED
      "AMPHENOL RF, 31-70221, AND DATE CODE"
5. DO NOT SCALE THIS DRAWING

THIRD ANGLE PROJ.

REVISIONS

| REV | DESCRIPTION | DATE | ECO | APPR |
|---|---|---|---|---|
| -- | RELEASE TO MFG | ----- | ----- | ----- |
| K | REDRAWN IN PRO/E, BODY WAS ZINC DIE CAST | 9/14/10 | 48239 | |
| L | NOTE 1 PINS (4) WAS PIN; ADD REF FOR PINS & CONTACT | 12/8/11 | 48873 | |
| M | RELEASED AT ARFA | 27-Jan-15 | 50381 | SH |

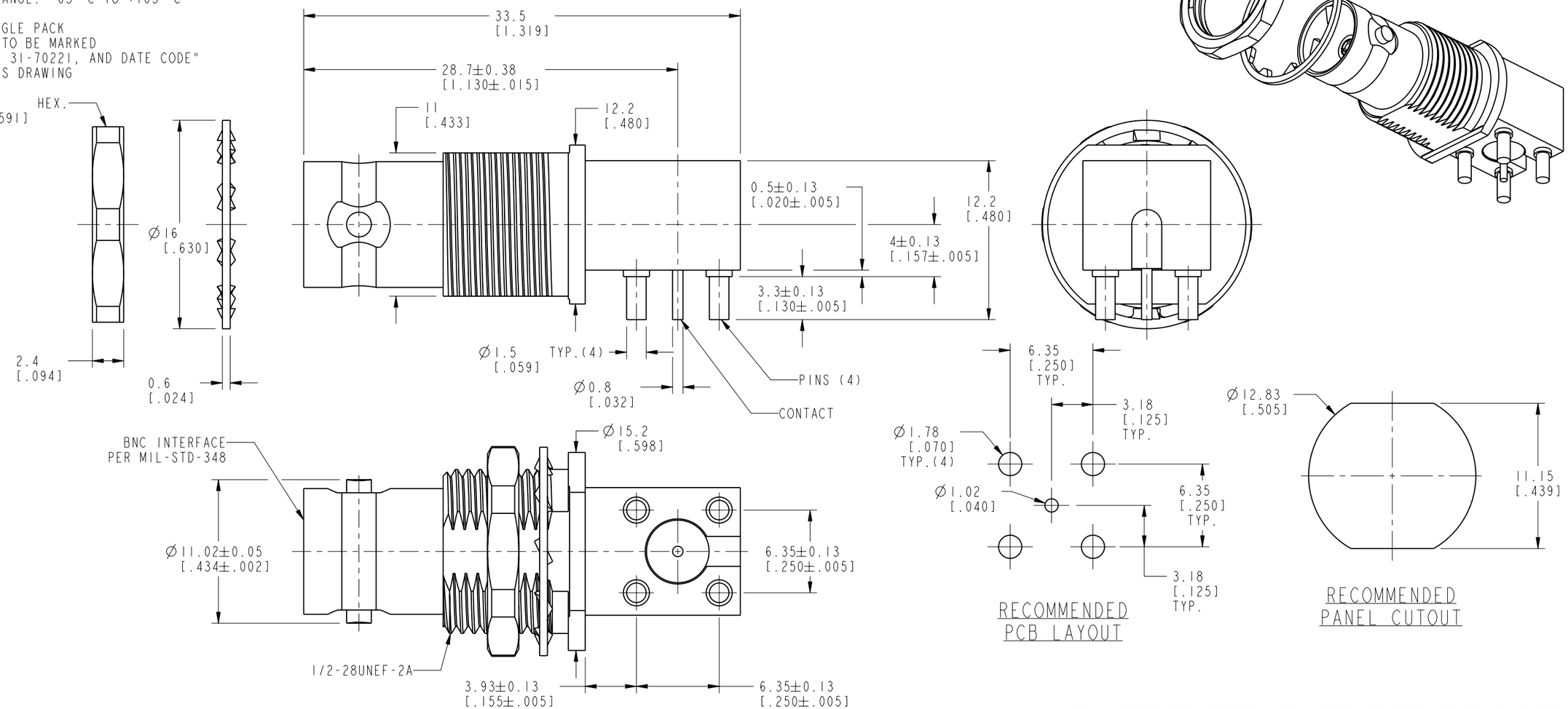


# CUSTOMER OUTLINE DRAWING

ALL OTHER SHEETS ARE FOR INTERNAL USE ONLY

UNLESS OTHERWISE SPECIFIED, DIMENSIONS ARE IN METRIC AND TOLERANCES ARE:

| <0.5mm | 0.5 - 6mm | 6 - 30mm | 30 - 120mm | ANGLES |
|---|---|---|---|---|
| ± 0.05mm | ±0.1mm | ±0.2mm | ± 0.3mm | ±1° |

NOTICE - These drawings, specifications, or other data (1) are, and remain the property of Amphenol corp. (2) must be returned upon request; and (3) are confidential and not to be disclosed to any person other than those to whom they are given by Amphenol Corp. the furnishing of these drawings, specifications, or other data by Amphenol Corp., or to any other person to anyone for any purpose is not to be regarded by implication or otherwise in any manner licensing, granting rights to permitting such holder or any other person to manufacture, use or sell any product, process or design, patented or otherwise, that may in any way be related to or disclosed by said drawings, specifications, or other data.

MATERIAL

REFERENCE

CONFIGURATION LEVEL:

FINISH

| | | | |
|---|---|---|---|
| DRAWN TANGOR | DATE 27-Jan-15 | TITLE BNC RIGHT ANGLE 75 OHM PCB JACK | Amphenol RF www.amphenolrf.com |
| ENGINEER T. SMITH | DATE 13-Aug-10 | | DRAWING NO. 31-70221 |
| APPROVED S.HSIEH | DATE 27-Jan-15 | SCALE: 2.0:1.0 SHEET 2 OF 2 | ITEM NO. 31-70221 |
| CAD FILE | | DWG SIZE B / REV M | PART NO. 31-70221 |