BUD	PART NAME	INTERNAL PLATE	PART No.	MPX-510 & MPX-510-A	REV. DATE	10-27-15

MATERIAL: (-A SUFFIX) .060 [1.5] THK. ALUMINUM (3003-H14) NATURAL FINISH
(NO SUFFIX) 16 GA. C.R.S. ZINC PLATE

DRAWING FOR REFERENCE

WE RESERVE THE RIGHT TO MAKE CHANGES TO OUR STANDARD PRODUCTS. PLEASE CONSULT WITH BUD INDUSTRIES PRIOR TO USING THIS DRAWING FOR DESIGN PURPOSE.

DIMENSIONS IN INCH[MM]

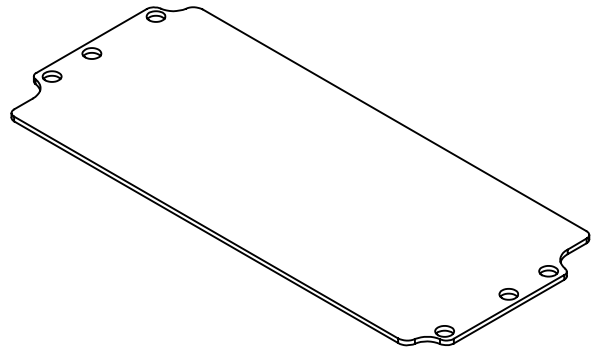

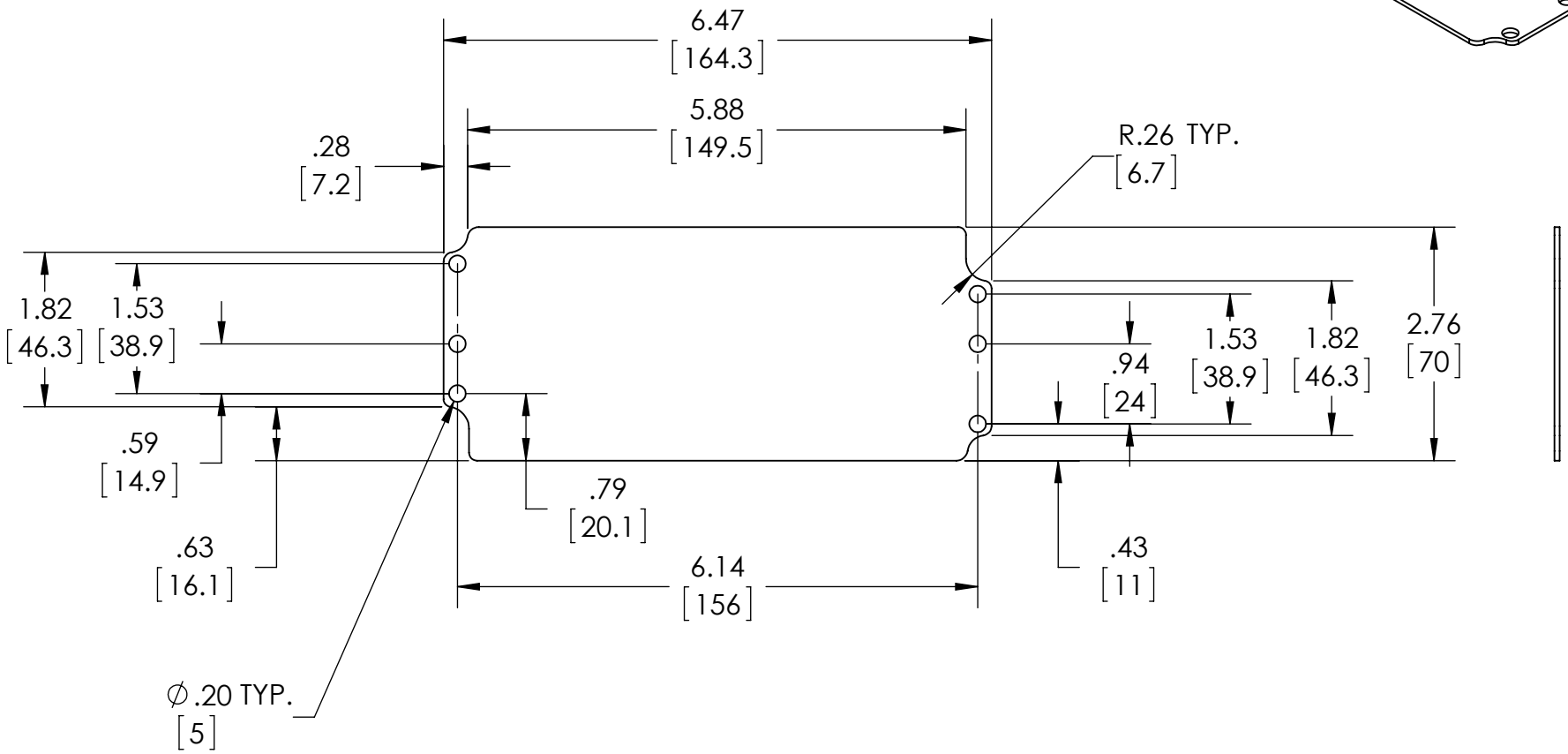

WILL FIT ENCLOSURE: #ATX-10510