DO NOT SCALE
DIMENSIONS IN mm

METRIC

THIRD ANGLE PROJECTION

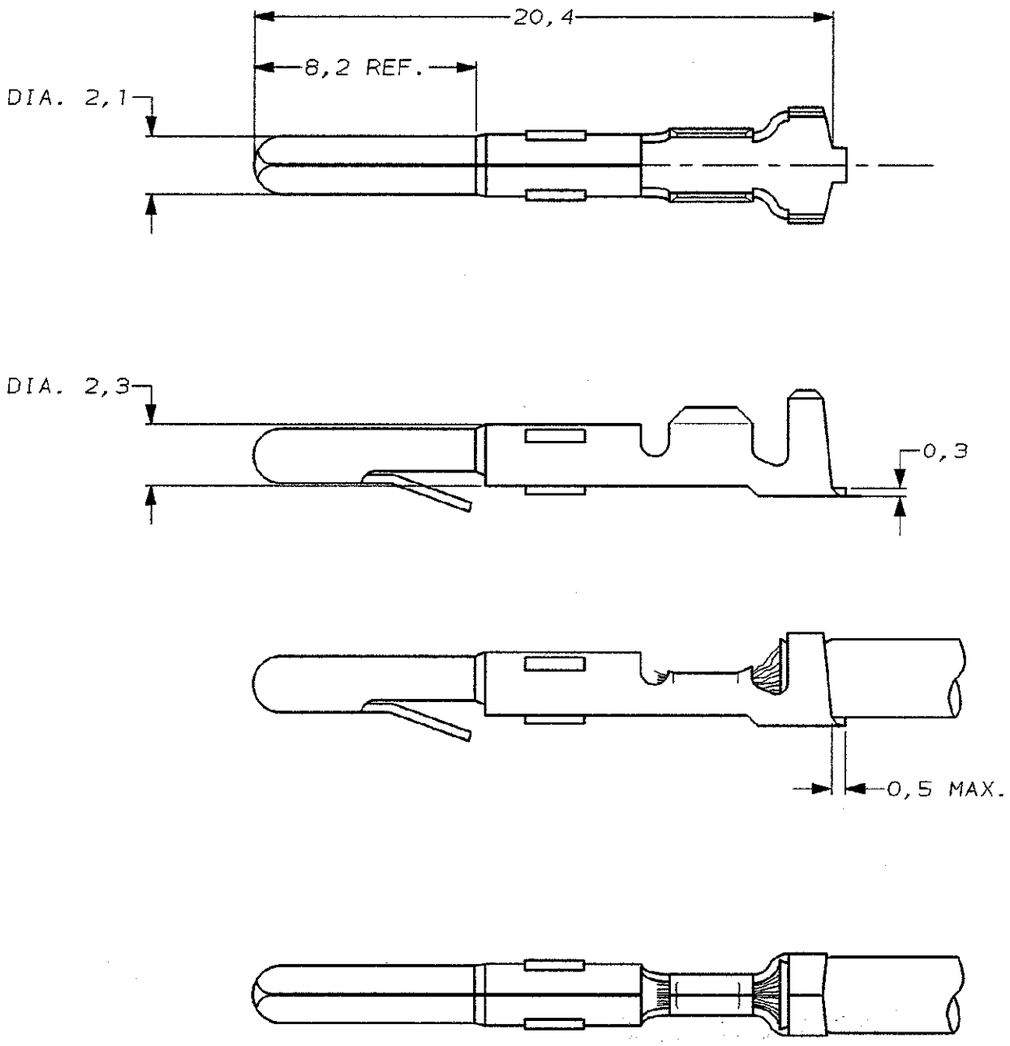

WIRE RANGE : 0,3-0,75mm
INSULATION RANGE : 1,4-2,4 DIA.

		-	-	-	
			-	-	
		-	-	-	
		-	-	-	
		-	-	-	
		-	-	-	
		-	-	-	
		-	-	-	
		PRE-TINPLATED	PHOSPHOR BR.	163558-4	
		UNPLATED	PHOSPHOR BR.	163558-3	
		PRE-TINPLATED	BRASS	163558-2	
		UNPLATED	BRASS	163558-1	
NOTES		PLATING	MATERIAL	PARTNUMBER	
-	-	-	-	-	
-	-	-	-	-	
-	-	-	-	-	
-	-	-	-	-	
-	-	-	-	-	
-	-	-	-	-	
B	EH-1221-96	JvL	AB	24-10-96	
LTR.	REVISION RECORD	DR.	CHK.	DATE	

CUSTOMER DRAWING — FOR REFERENCE ONLY WILL NOT BE UPDATED

© COPYRIGHT 19- BY AMP HOLLAND B.V.
ALL INTERNATIONAL RIGHTS RESERVED. AMP PRODUCTS MAY BE COVERED BY U.S. AND FOREIGN AND/OR PATENTS PENDING.

THIS DRAWING IS UNPUBLISHED
~~RELEASED FOR PUBLICATION ,19~~

AMP — AMP HOLLAND B.V. 's-Hertogenbosch, The Netherlands.

NAME: PIN MATE-N-LOK.

DR.: J.v.LIEMPT	CHK.: A.BIJNEN.	APP.: M.v.DRIEL	DWG.No. C-163558		REV.LTR. B	SHEET 1 OF 1	A3
DATE: 24 OCT 96	DATE: -	DATE: -					

R6-210 (REV.04-91)

-JAN-97 11:50:59 ab005666 /home/ab005666/odmmod

8 7 6 5 4 3 2 1

F E D C B A