samtec

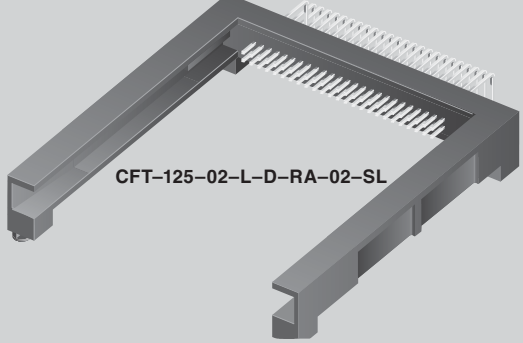

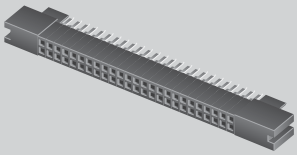

(1,27 mm) .050"

CFT, CFS SERIES

COMPACT FLASH TERMINALS & SOCKETS

SPECIFICATIONS

For complete specifications and recommended PCB layouts see www.samtec.com?CFT or www.samtec.com?CFS

Insulator Material:
Black Liquid Crystal Polymer
Terminal Material (CFT):
Phosphor Bronze
Contact Material (CFS):
BeCu
Plating:
Sn or Au over 50µ" (1,27 µm) Ni
Operating Temp Range:
CFT = -55°C to +105°C Tin
CFT = -55°C to +125°C Gold
CFS = -55°C to +125°C
Contact Resistance (CFS):
10 mΩ
Insertion Depth (CFS):
(3,05 mm) .120" min
Insertion Force (CFS):
(Single contact only)
3.3 oz (0,92 N) avg.
Withdrawal Force (CFS):
(Single contact only)
2.5 oz (0,70 N) avg.
Lead–Free Solderable:
Yes
SMT Lead Coplanarity:
CFT = (0,15 mm) .006" max
CFS = 0,10 mm) .004" max
RoHS Compliant:
Yes

APPLICATIONS

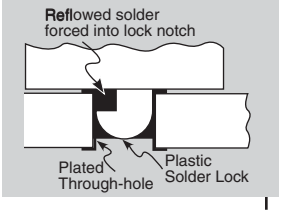

RECOGNITIONS

For complete scope of recognitions see www.samtec.com/quality

FILE NO. E111594

TIGER EYE CONTACT™

Note: Some lengths, styles and options are non-standard, non-returnable.

CFT – 125 – LEAD STYLE – PLATING OPTION – D – RA – CARD LENGTH – SL

Mates with:
CFS

Specify LEAD STYLE from chart

–L
= 10µ" (0,25 µm) Gold on post, Matte Tin on tail

–S
= 30µ" (0,76 µm) Gold on post, Matte Tin on tail

–01
= (25,40 mm) 1.00" Card Length

–02
= (50,80 mm) 2.00" Card Length

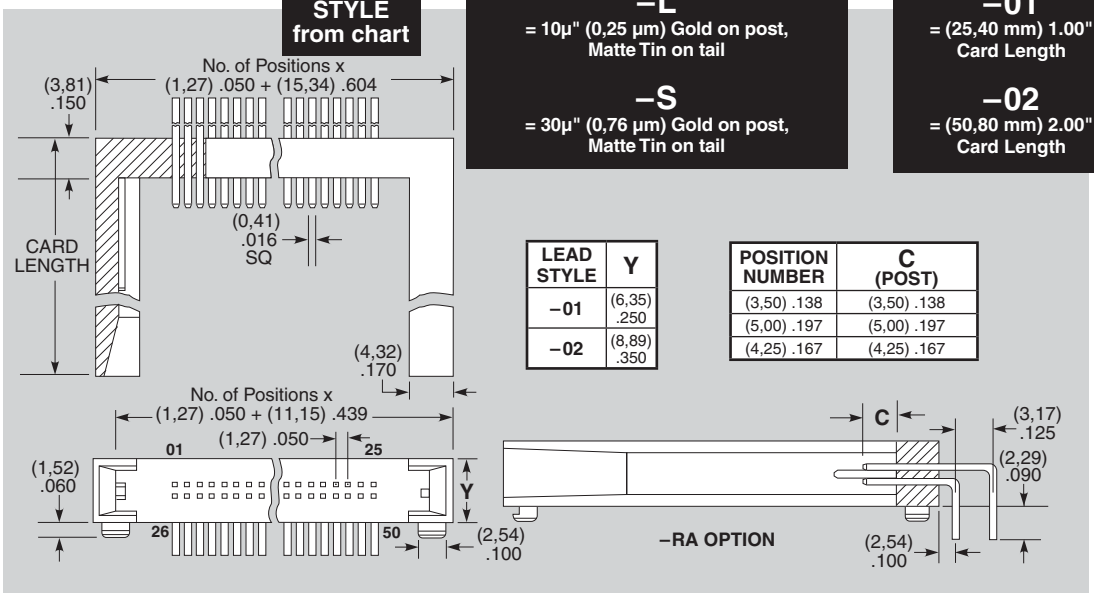

LEAD STYLE	Y
–01	(6,35) .250
–02	(8,89) .350

POSITION NUMBER	C (POST)
(3,50) .138	(3,50) .138
(5,00) .197	(5,00) .197
(4,25) .167	(4,25) .167

CFS – 1 – NO. PINS PER ROW – CARD THICKNESS – PLATING OPTION – D

Mates with:
CFT

25

–01
= (0,80 mm) .031" thick board

–02
= (1,60 mm) .062" thick board

–L
= 10µ" (0,25 µm) Gold on contact, Matte Tin on tail

–S
= 30µ" (0,76 µm) Gold on contact, Matte Tin on tail

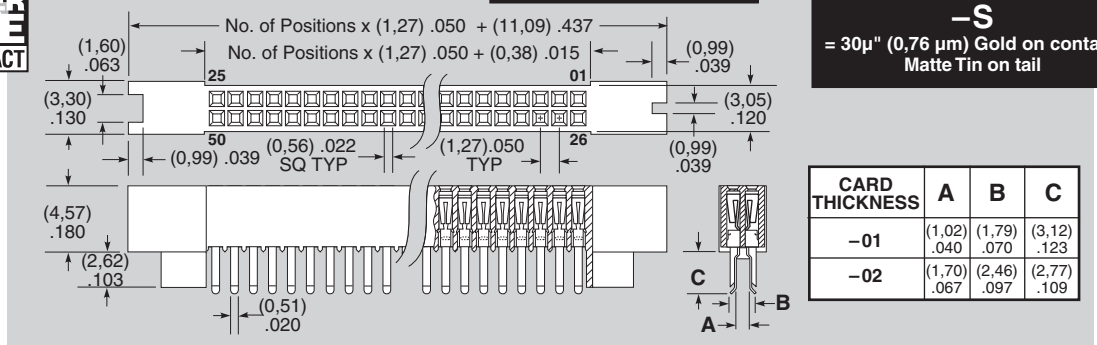

CARD THICKNESS	A	B	C
–01	(1,02) .040	(1,79) .070	(3,12) .123
–02	(1,70) .067	(2,46) .097	(2,77) .109

Due to technical progress, all designs, specifications and components are subject to change without notice.