FEMALE FACE VIEW

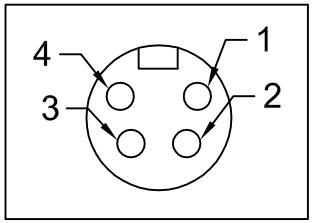

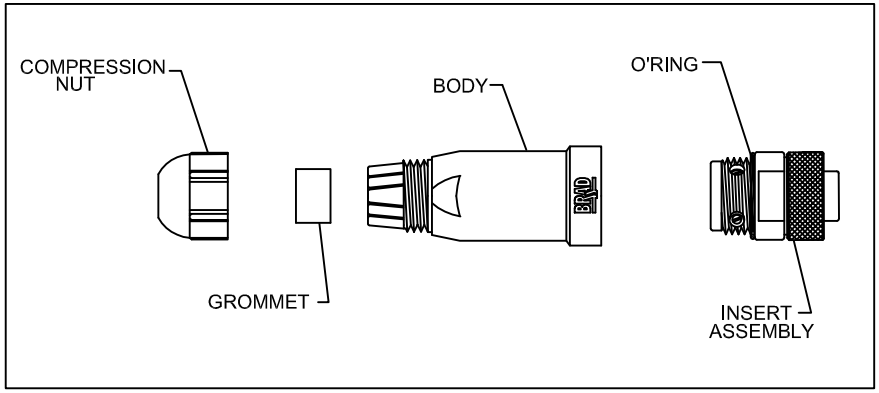

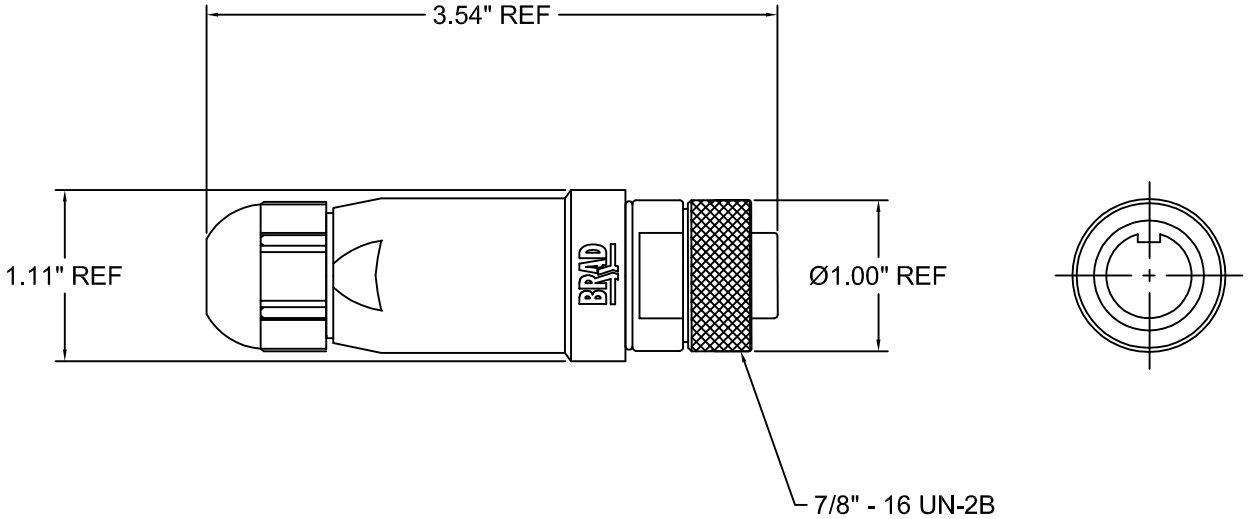

SPECS:
BODY: POLYAMIDE PA6 (BLACK)
INSERT: BLACK PUR
COUPLING NUT: NICKEL-PLATED BRASS
CABLE O.D RANGE: 0.20" - 0.48"
TERMINATION: SCREW
ACCEPTABLE WIRE GAUGE: 14AWG - 24AWG
ELECTRICAL: 600V AC/DC, 8A
TEMPERATURE: -40°C to 80°C

REFERENCE USE ONLY

MATERIAL NUMBER	ENGINEERING NUMBER
1300170015	1A4000-34

GENERAL TOLERANCES (UNLESS SPECIFIED)	mm	INCH
4 PLACES		
3 PLACES		
2 PLACES		
1 PLACE		

DESCRIPTION

REV

DRAFT WHERE APPLICABLE MUST REMAIN WITHIN DIMENSIONS

DIMENSION STYLE

SCALE

DESIGN UNITS

THIRD ANGLE PROJECTION

DRAWN BY RB DATE

CHECKED BY --- DATE ---

APPROVED BY --- DATE ---

MATERIAL NO. 1300170015

SIZE C

TITLE BRAD CONNECTIVITY MINI-CHANGE FIELD-ATTACHABLE 4POLE FEMALE STRAIGHT

molex MOLEX INCORPORATED

DOCUMENT AEP DIVISION

SHEET NO. 1 OF 1

THIS DRAWING CONTAINS INFORMATION THAT IS PROPRIETARY TO MOLEX INCORPORATED AND SHOULD NOT BE USED WITHOUT WRITTEN PERMISSION