Alle Rechte vorbehalten/ *All rights reserved*

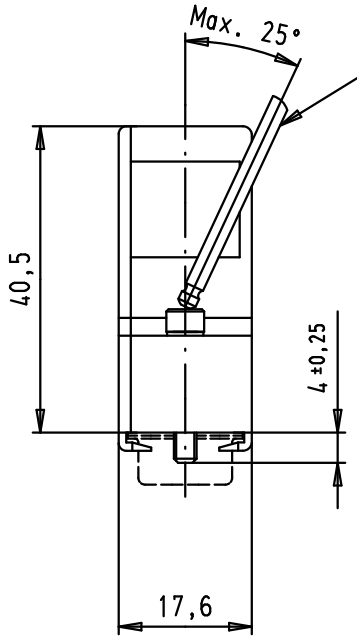

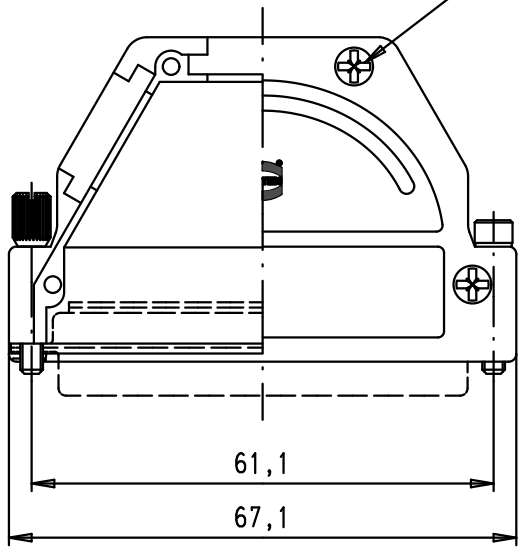

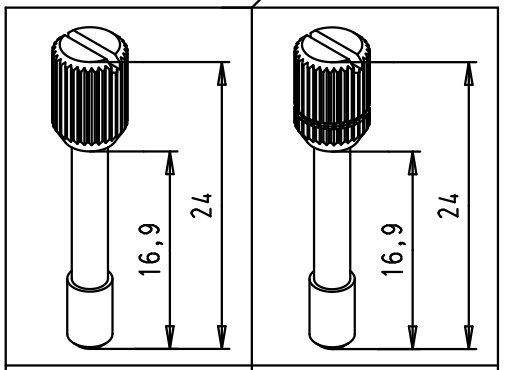

X=0	X=3
4-40 UNCx16,9	M3x16,9

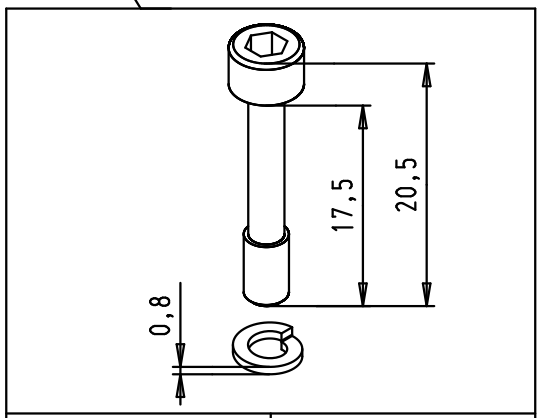

X=1	X=2
M3x17,5	4-40 UNCx17,5

NOTA :Full metal hood made
with zinc diecast

Part number	Screw type	screw size	Mod.	Dat.	Name
61 03 001 X019					
61 03 001 3019	Knurled thumb screw	M3 x 16,9			
61 03 001 0019		4-40 UNC x 16,9			
61 03 001 2019	Cylinder socket head cap screw with spring washer [2,6 DIN 127B]	4-40 UNC x 17,5	36163	29/09/10	SC
61 03 001 1019		M3 x 17,5	32473	10/01/05	STRAUCH

	Dat.	Name
Detail.	14/08/03	STRAUCH
Insp.		
Stand.		

All Dim. in mm
Orig. Size DIN A 4

HARTING Electronics GmbH & Co. KG
D-32339 ESPELKAMP

INDUCOM - 50 poles, full metal hood for D-Sub, angled/straight cable entry

Maßstab/ *Scale* 1:1

TB 61 03 001 X019

Sub.

Blatt/ *Page* 1/1