NOTES:

1. TERMINAL TO BE USED IN HOUSINGS 70066-**** AND 70450-****
2. REFER TO PRODUCT SPECIFICATION PS-71851
3. REFER TO MOLEX OPERATIONS AND SERVICE MANUAL FOR CRIMP DETAILS
4. TERMINAL TO BE USED WITH (0.64)/.025 SQUARE PINS
5. TERMINAL TO BE USED WITH 22-24 AWG STRANDED WIRE WITH (1.63)/.064 MAX. DIA. INSULATION
6. TERMINALS SUPPLIED IN REEL FORM

PLATING:

.000015 MINIMUM GOLD PLATE IN SELECT AREA WITH .000075 MINIMUM TIN PLATE IN SELECT AREA OVER NICKEL PLATE OVERALL

*THE PRIMARY SHIPPING CARTON WILL BE LABELED "COMPLIANT TO RoHS DIRECTIVE 2002/95/EC AND ELV ANNEX II OF DIRECTIVE 2000/53/EC". CARTONS WITHOUT THIS LABEL MAY CONTAIN PRODUCT WITH LEAD.

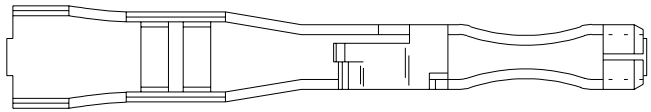

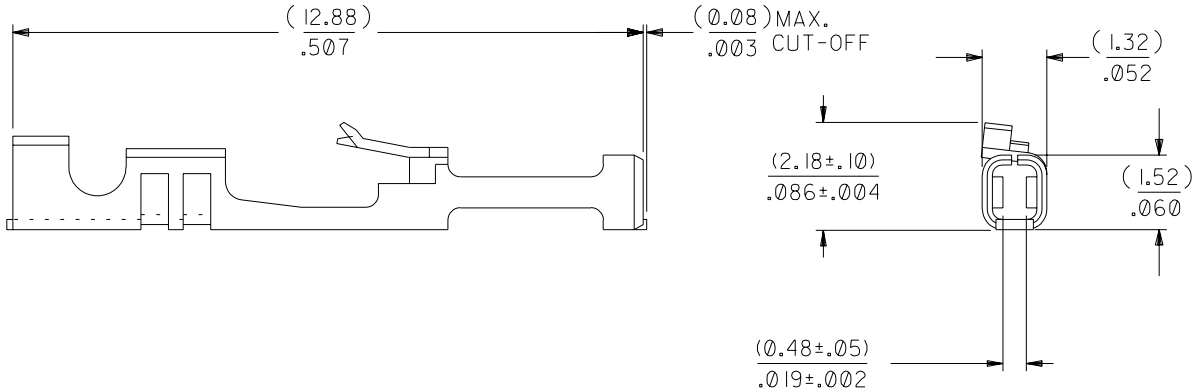

LTR.	REVISIONS	LTR.	REVISIONS
		B	REVISE PER ECR# U82219 11-07-88 MJM/MGB
C	LEAD FREE UCP2004-1769 RWHITE 04/03/24	A	FINAL RELEASE PER ERO #26846 7/14/88 MJM
B1	REVISED ECR #U80270 MCGRATH 97/07/31	3	REVISE PER ERO #26254 3/25/88 MJM

DIMENSIONS SHOWN (METRIC) INCH

UNLESS OTHERWISE SPECIFIED TOLERANCES: ANGULAR ± 1/2°

	INCH	METRIC
3 PLACE	± .010	---
2 PLACE	± .014	± 0.25
1 PLACE	---	± 0.35

DRAFT WHERE APPLICABLE MUST REMAIN WITHIN DIMENSIONS

DRWG. BY	MJM	CHK'D. BY	MJM
APP'D. BY	WAZ	SCALE	10:1

C = 0 ▼ = 0 REVISE ONLY ON CAD SYSTEM

TITLE
TERMINAL-BOX/CRIMP
HIGH FORCE CONTACT

MOLEX INCORPORATED
LISLE, ILL. 60532 U.S.A.

SHEET NO. 1 | DATE 03/25/88

PART NO. 016-02-1124 | DRWG. NO. SD-71851-0024

FILE NAME S71851X5

THIS DRAWING CONTAINS INFORMATION THAT IS PROPRIETARY TO MOLEX INC. AND SHOULD NOT BE USED WITHOUT WRITTEN PERMISSION.

DIV. DA | SIZE B